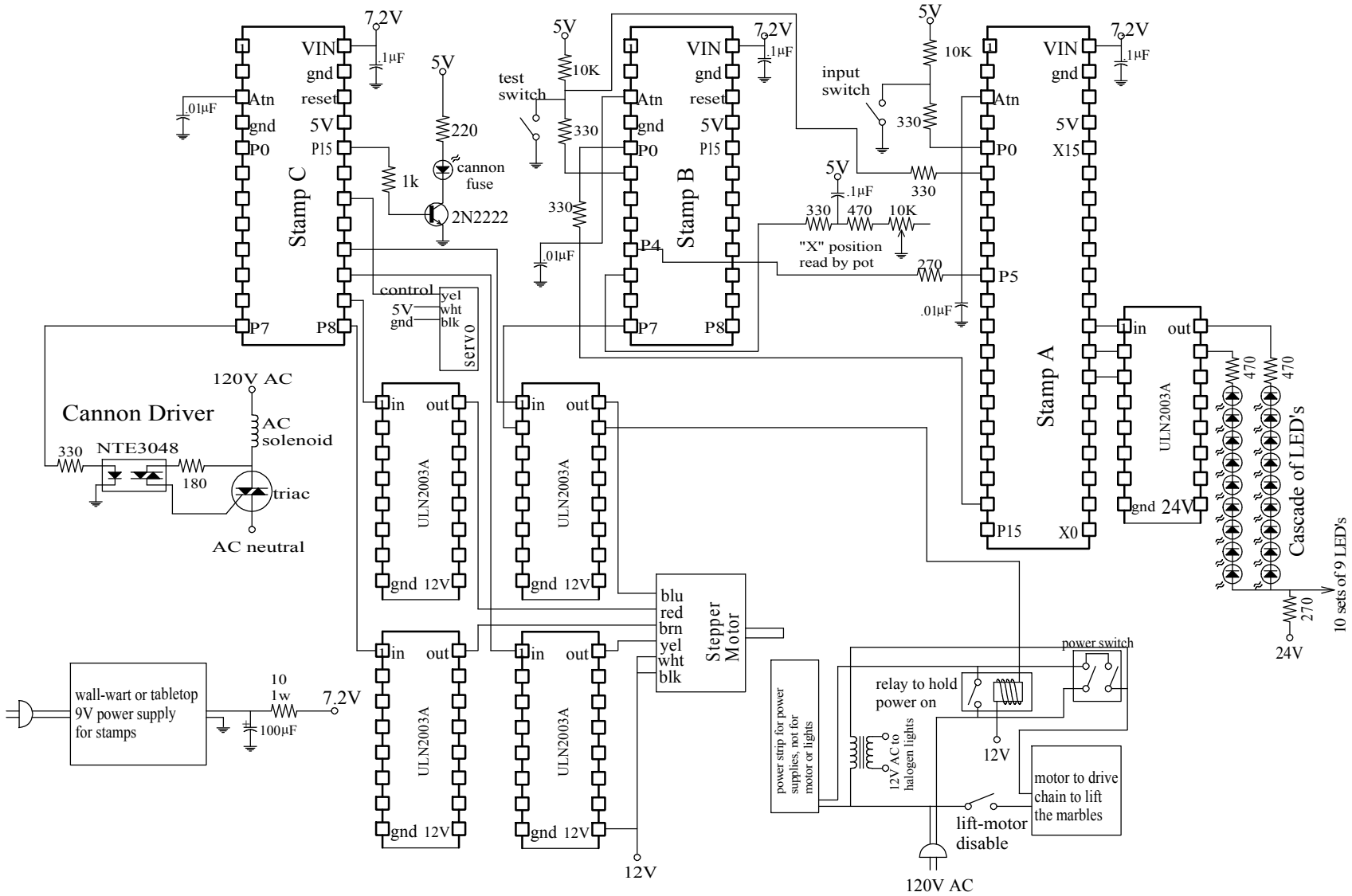
Stamp C
VIN
gnd
reset
5V
P15
Atn
gnd
P0
P7
P8
7.2V
.1µF
.01µF
5V
220
cannon fuse
1k
2N2222
control
5V
gnd
yel
wht
blk
servo
Stamp B
VIN
gnd
reset
5V
P15
Atn
gnd
P0
P4
P7
P8
test switch
10K
330
.01µF
input switch
330
.1µF
470
10K
"X" position read by pot
270
.01µF
Stamp A
VIN
gnd
5V
X15
Atn
P0
P5
P15
X0
in
out
ULN2003A
gnd 24V
470
Cascade of LED's
10 sets of 9 LED's
270
24V
120V AC
Cannon Driver
AC solenoid
330
NTE3048
180
triac
AC neutral
in
out
ULN2003A
gnd 12V
Stepper Motor
blu
red
brn
yel
wht
blk
12V
wall-wart or tabletop 9V power supply for stamps
10
1w
100µF
7.2V
power strip for power supplies, not for motor or lights
12V AC to halogen lights
relay to hold power on
power switch
12V
motor to drive chain to lift the marbles
lift-motor disable
120V AC